PUBLISHED: 28-APR-2017
2017.0 DISCOVERY (LR), 308-07

TRANSFER CASE - [+] TWIN SPEED TRANSFER CASE

TRANSFER CASE FRONT OUTPUT SEAL

(G2006982)

REMOVAL AND INSTALLATION

SPECIAL TOOL(S)



205-818

Installer, Seal



308-636

Installer

transmissionmanuals.com



JLR-308-926

Support Tool, Transfer Case

PART(S)

STEP	PART NAME	QUANTITY
Installation Step 1	Transfer case front output seal and bearing kit	1
Installation Step 3	Circlip	1

REMOVAL

NOTE:

- Some variation in the illustrations may occur, but the essential information is always correct.
- Some components shown removed for clarity.

1. Disconnect the battery ground cable.
   Refer to: Specifications (414-00 Battery and Charging System - General Information, Specifications).

transmissionmanuals.com

2.

WARNING:

Make sure to support the vehicle with axle stands.

Raise and support the vehicle.

3. Remove the transfer case.
Refer to: Transfer Case - V6 S/C 3.0L Petrol (308-07 Transfer Case - Vehicles With: Twin Speed Transfer Case, Removal).
Refer to: Transfer Case - TDV6 3.0L Diesel (308-07 Transfer Case - Vehicles With: Twin Speed Transfer Case, Removal).
Refer to: Transfer Case - INGENIUM I4 2.0L Diesel (308-07 Transfer Case - Vehicles With: Twin Speed Transfer Case, Removal).

4.

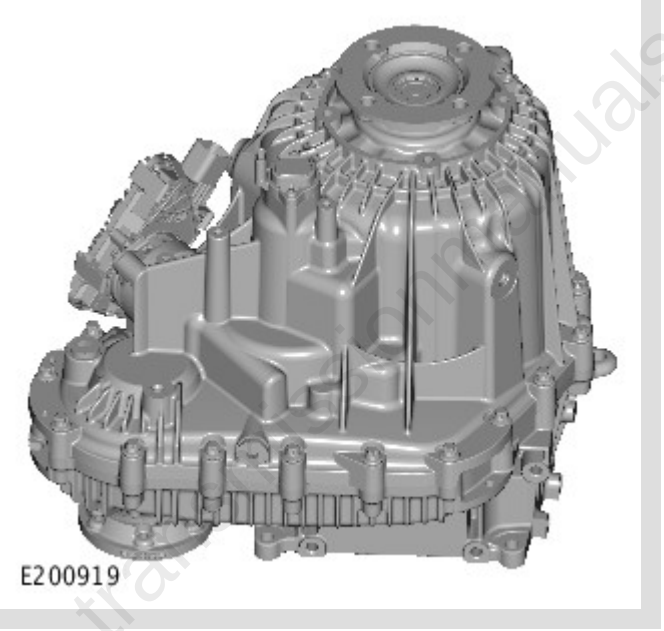

With assistance, secure the transfer case with its transmission mating face down on a flat surface as shown in the illustration.

5.

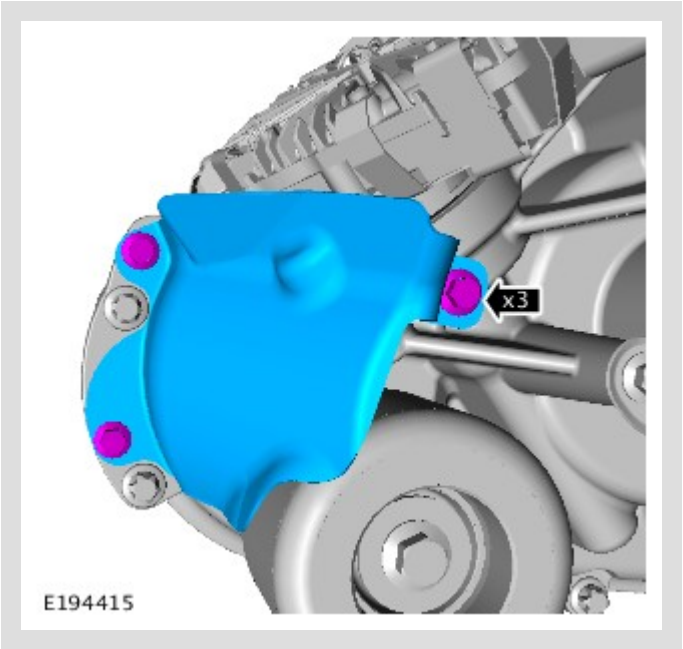

If equipped, remove the heat shield.

6.

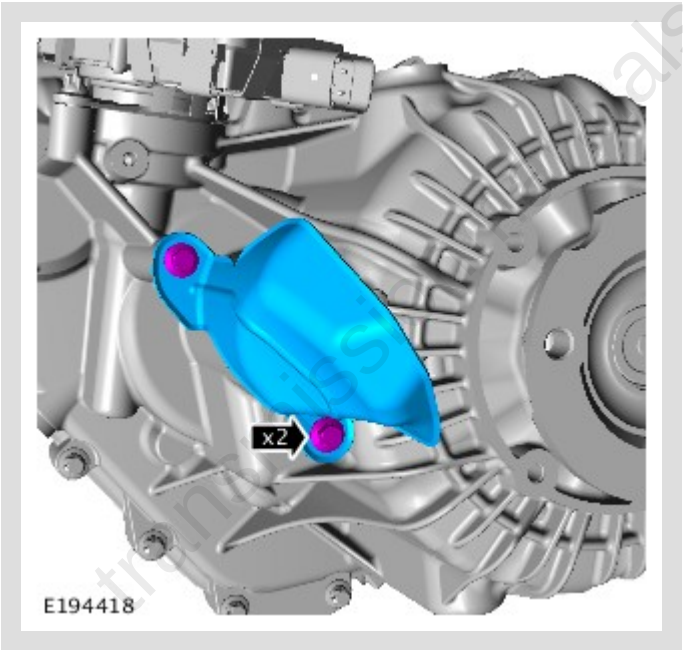

If equipped, remove the heat shield.

7.

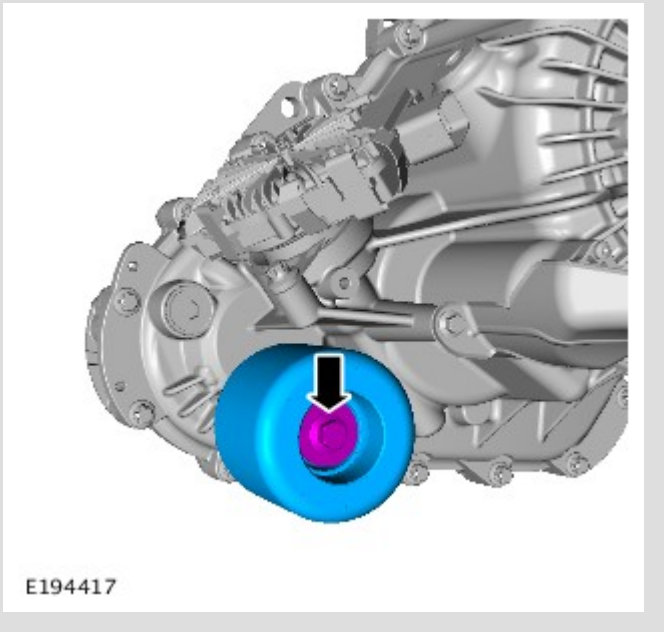

Remove the damper.

8.

CAUTION:

Make sure the bolt holes are clean and free of swarf.

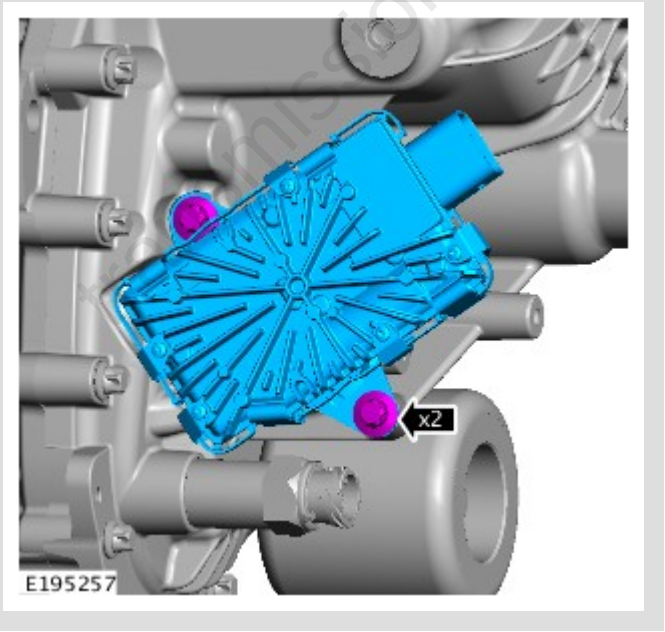

Remove the motor.

transmissionmanuals.com

9.

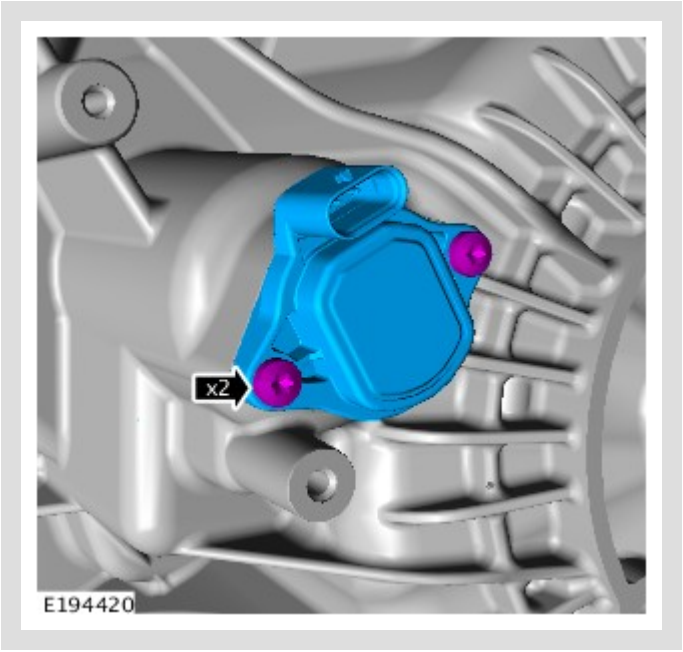

Remove the sensor.

10.

CAUTION:

Make sure the bolt holes are clean and free of swarf.

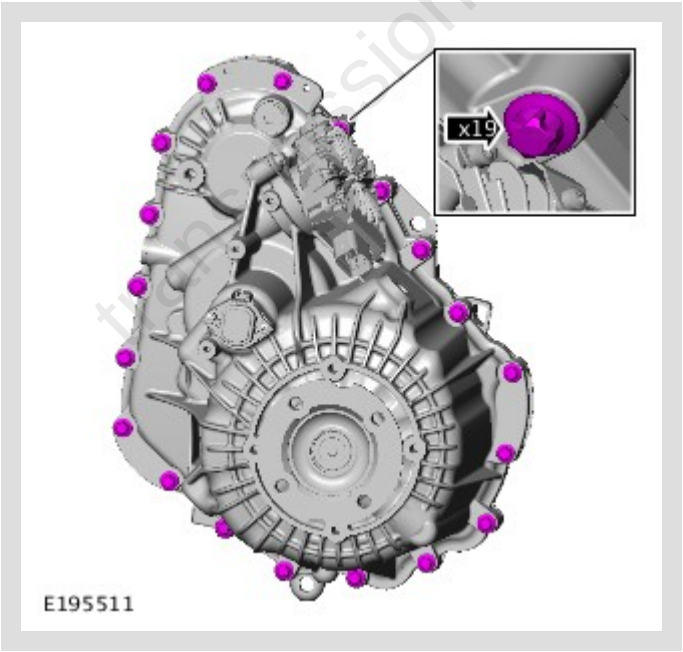

Remove the 19 transfer box case bolts.

transmissionmanuals.com

11.

CAUTION:

Care must be taken when turning the transfer case over. The transfer case halves must not be allowed to separate.

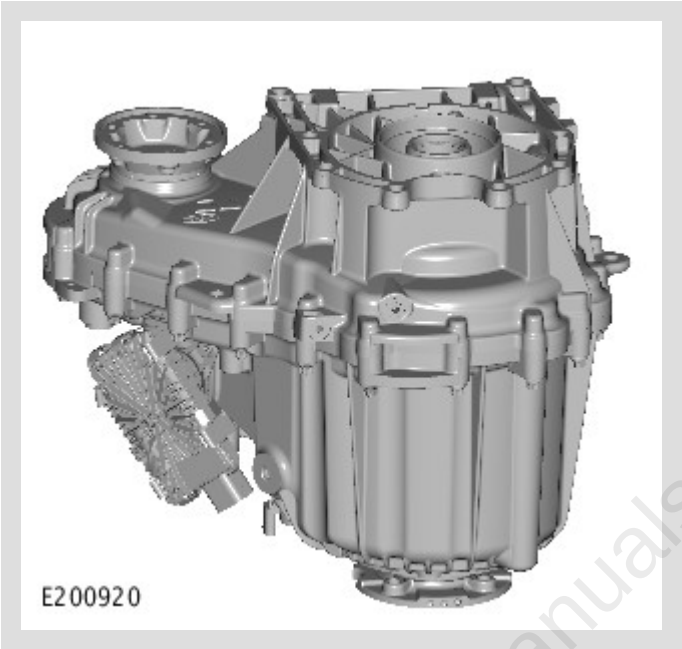

With assistance, release the transfer case and secure with the rear face of the transfer case facing down on a flat surface as shown in the illustration.

transmissionmanuals.com

12.

CAUTION:

Care must be taken to avoid damage to the mating surfaces.



Using a soft faced mallet, release the front casing.

13. Remove the sealant from the transfer case mating faces.

transmissionmanuals.com

14.

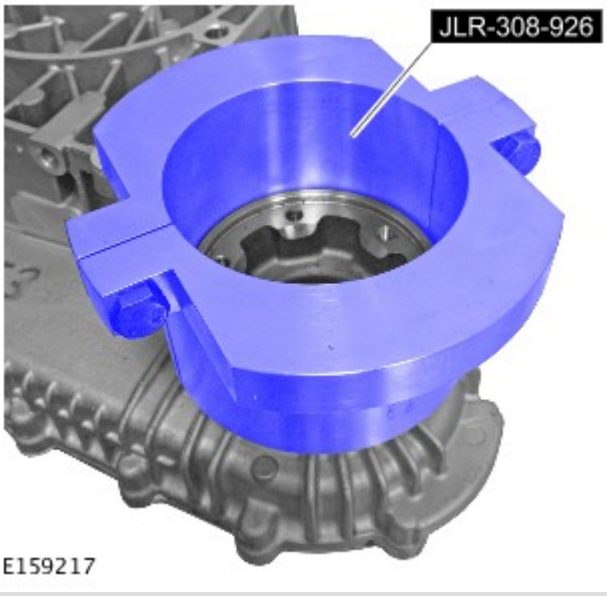

Using the special tool, support the output shaft flange.
Special Tool(s): JLR-308-926

15.

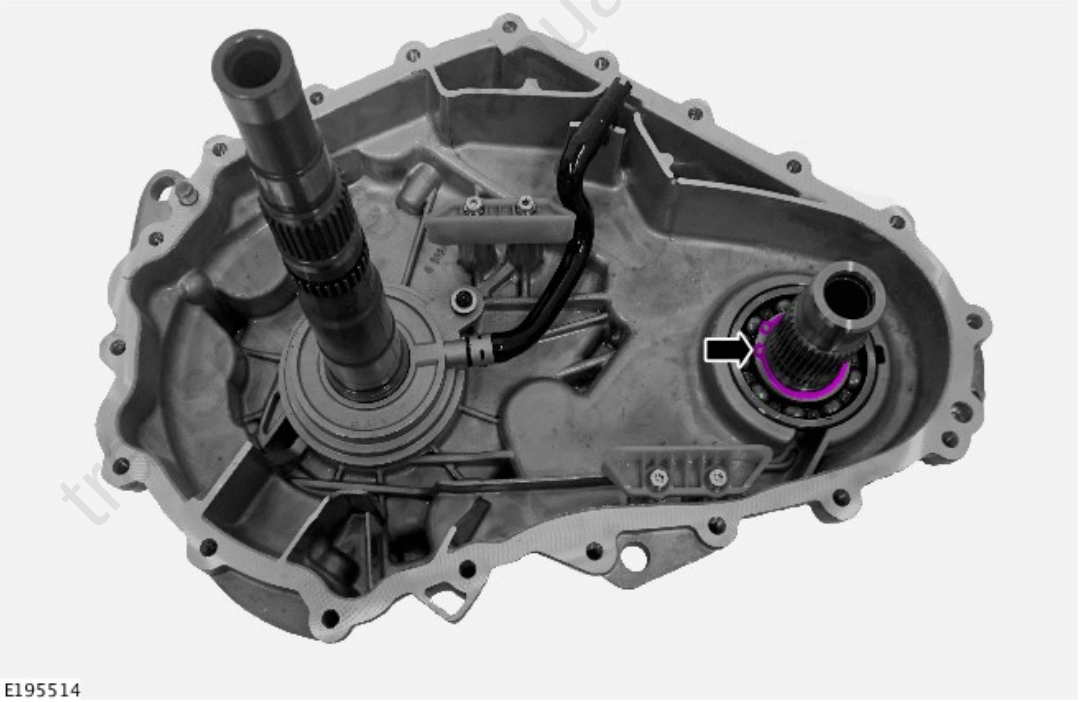

Remove and discard the circlip.

16.

CAUTION:

Do not use excessive force whilst removing the flange assembly.



Remove the front output shaft and flange assembly.

17.



Using a suitable tool, remove and discard the oil seal.

INSTALLATION

transmissionmanuals.com

1.

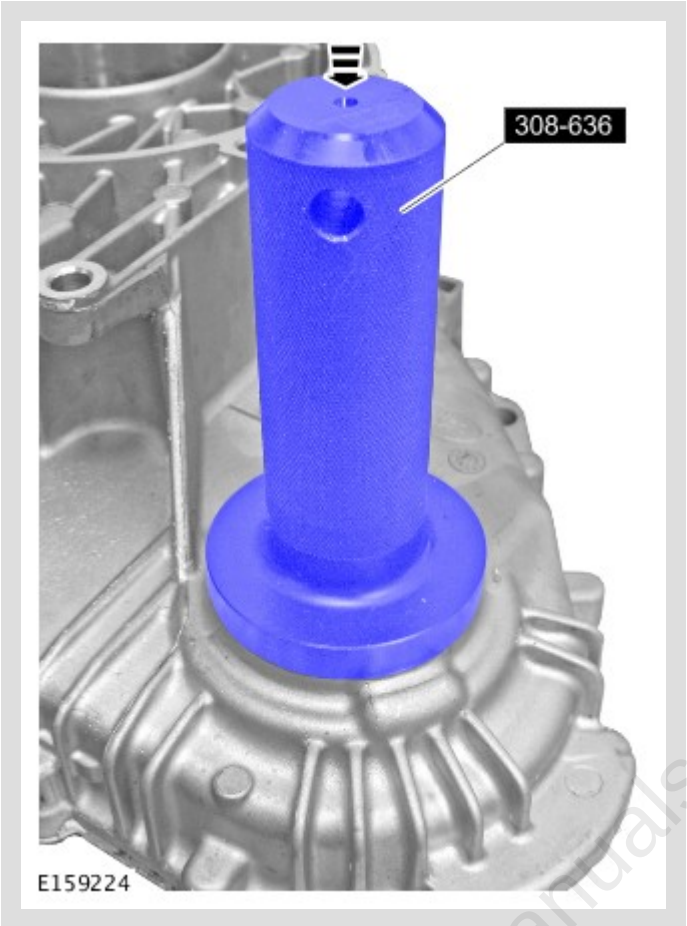

Install the seal.

Special Tool(s): 308-636

Renew Part: *Transfer case front output seal and bearing kit* *Quantity:* *1* .

transmissionmanuals.com

2.

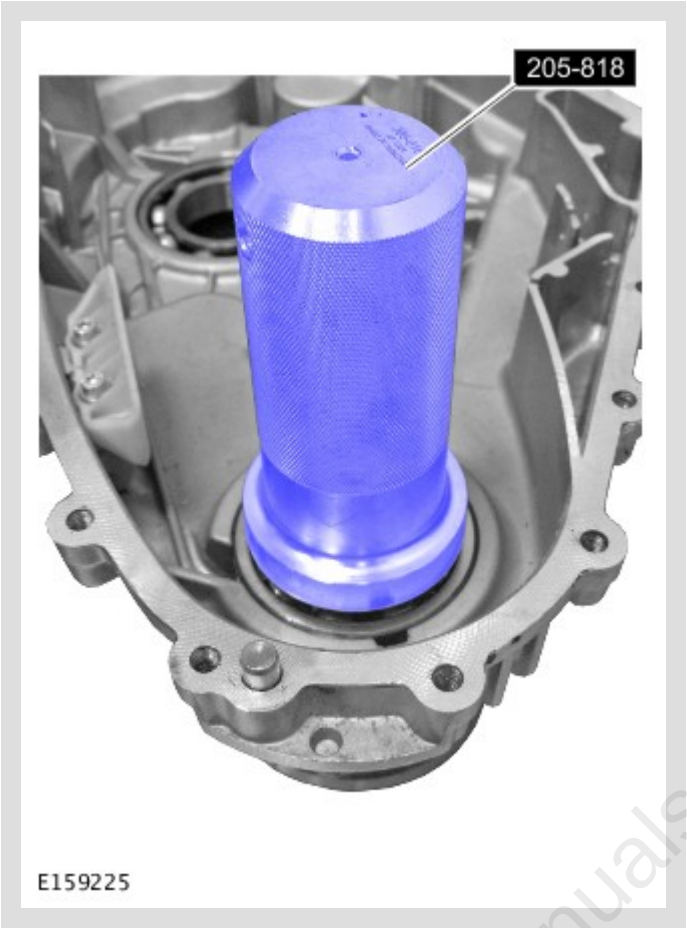

Using the special tool and with assistance, install the drive flange.
Special Tool(s): 205-818

transmissionmanuals.com

3.

NOTE:

Check that the circlip is fully engaged.



Install a new circlip.

Renew Part: Circlip Quantity: 1 .

transmissionmanuals

4.

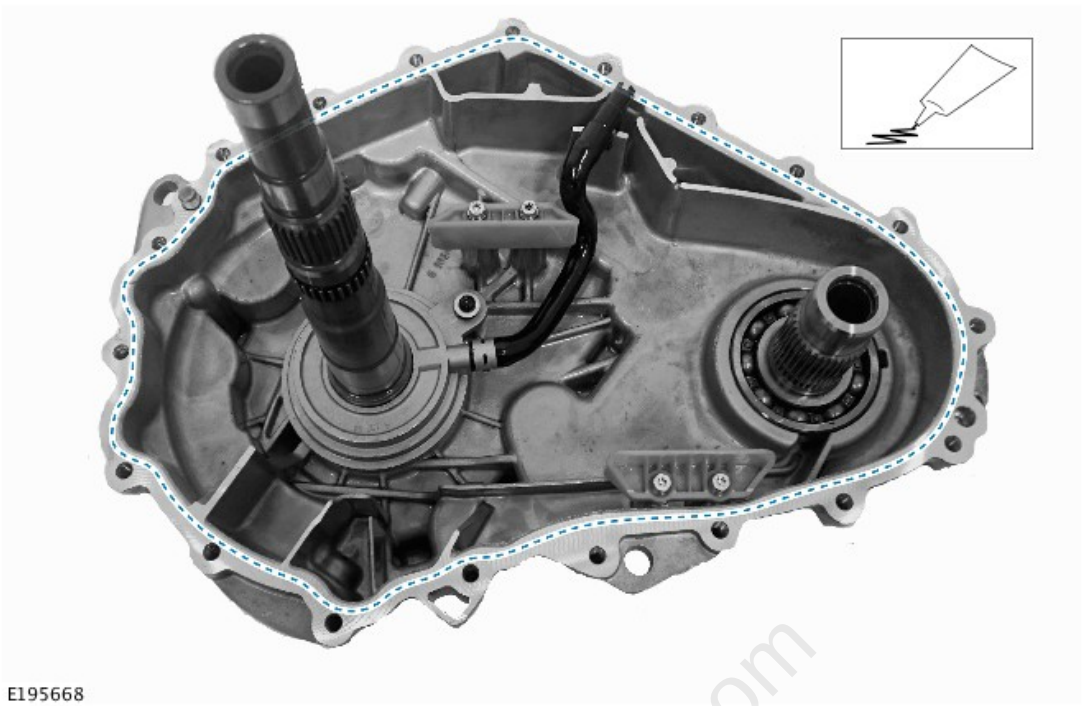

Apply a 2 mm bead of sealant to one surface of the transfer case mating face, as shown.
Refer to: Specifications (308-07 Transfer Case - Vehicles With: Twin Speed Transfer Case, Specifications).

transmissionmanuals.com

5.

CAUTION:

- Make sure that the input shaft spacer is located correctly.
- The input shaft and fluid pump assembly must be supported and held in place by hand, until it is located securely into the clutch assembly.

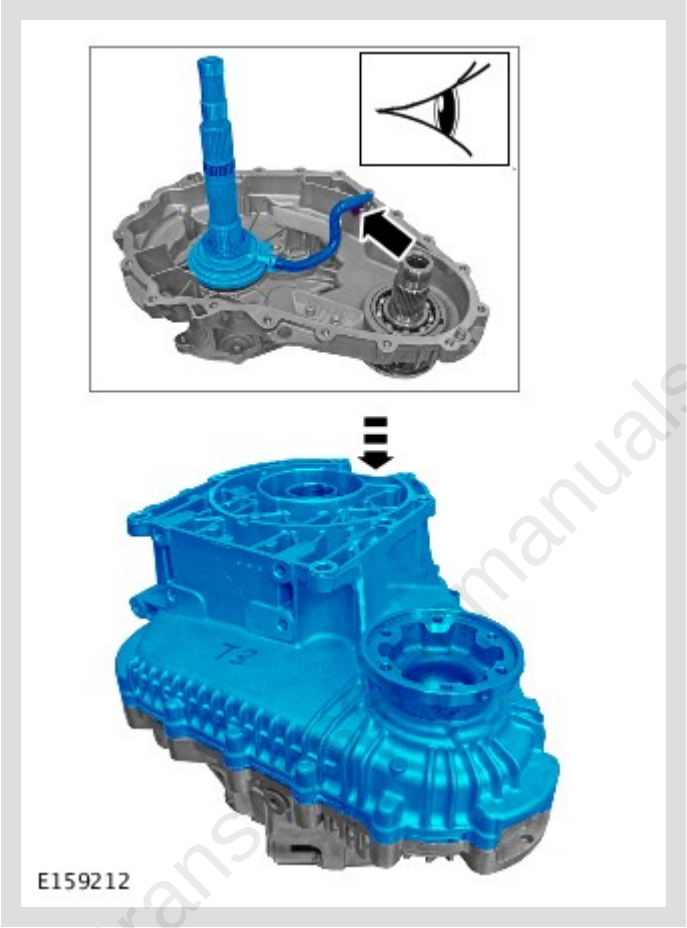

Install the front half of the transfer case.

transmissionmanuals.com

6.

CAUTION:

Care must be taken when turning the transfer case over. The transfer case halves must not be allowed to separate.

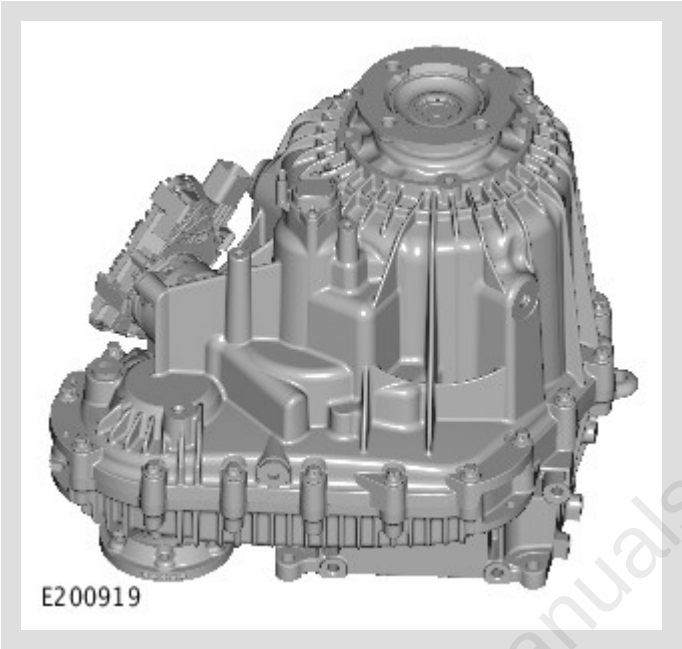

With assistance, release the transfer case and secure with its transmission mating face down on a flat surface.

transmissionmanuals.com

7.

CAUTION:

Only tighten the bolts finger-tight at this stage.

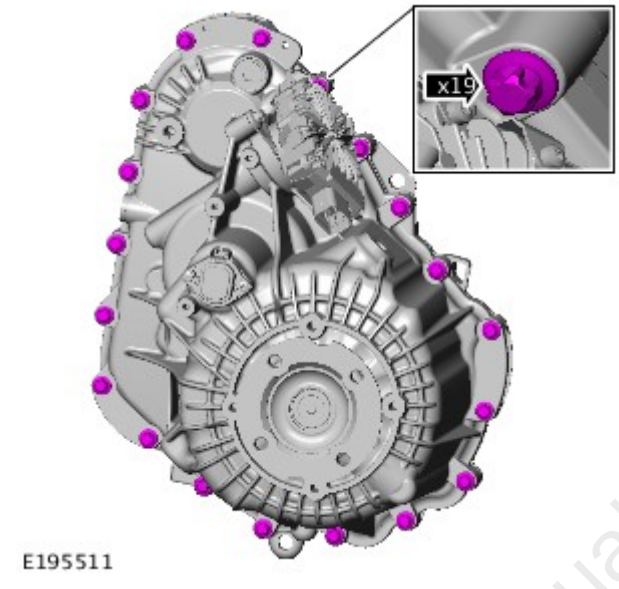

Install the 19 transfer box case bolts.

8.

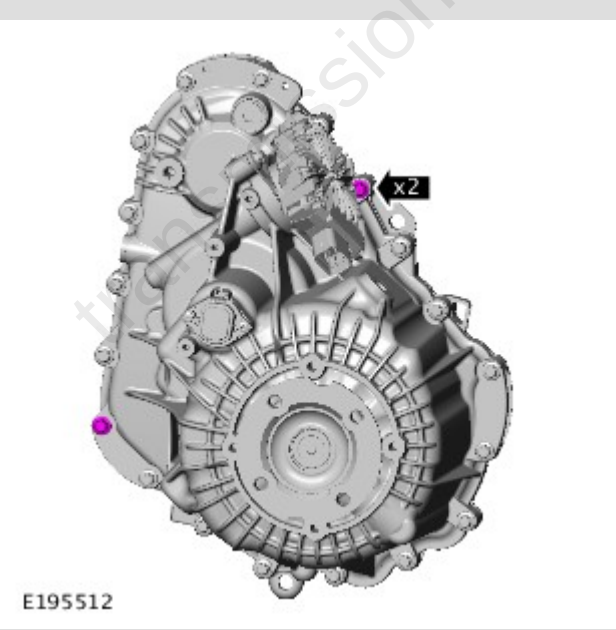

Torque: **10 Nm**

transmissionmanuals.com

9.

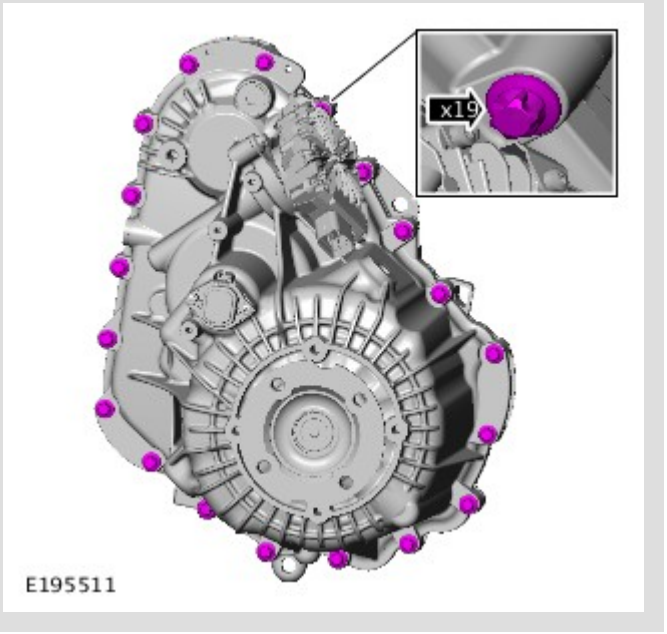

Fully tighten the 19 transfer box case bolts.

Torque: **35 Nm**

10.

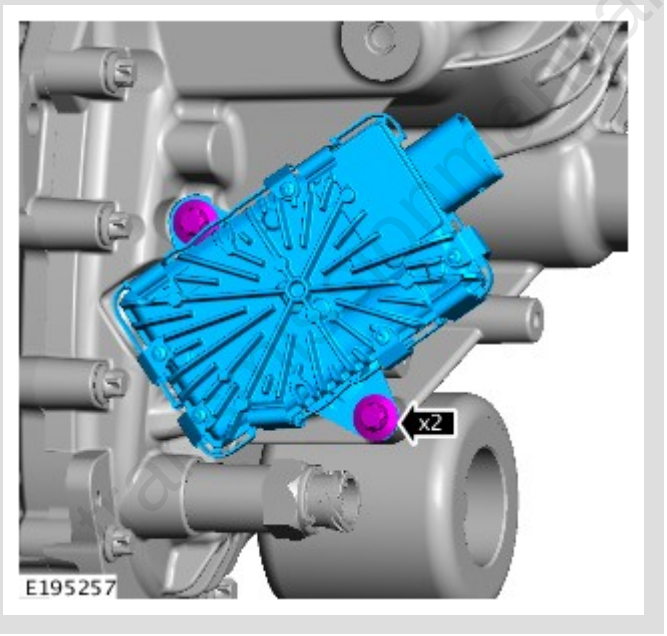

Install the motor.

Torque: **35 Nm**

11.

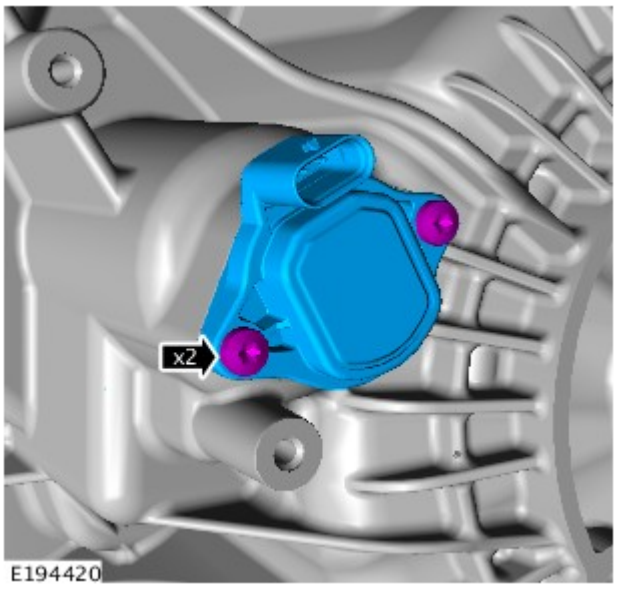

Install the sensor.

Torque: **5 Nm**

12.

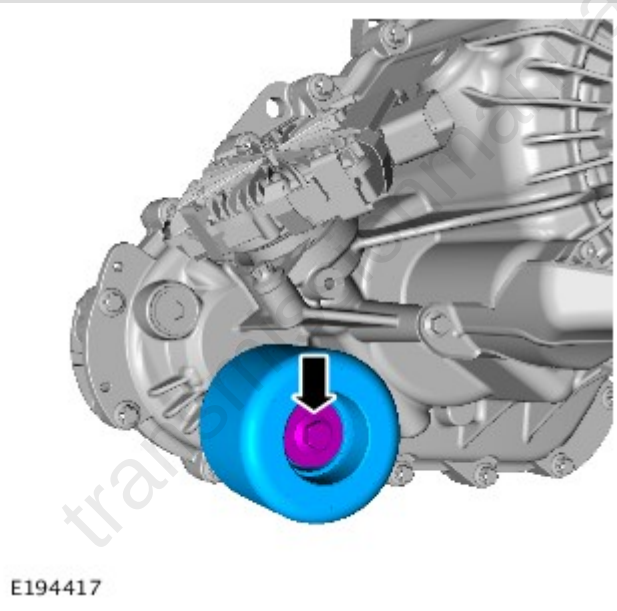

Install the damper.

Torque: **75 Nm**

transmissionmanuals.com

13.

NOTE:

This step is only required if previously removed.

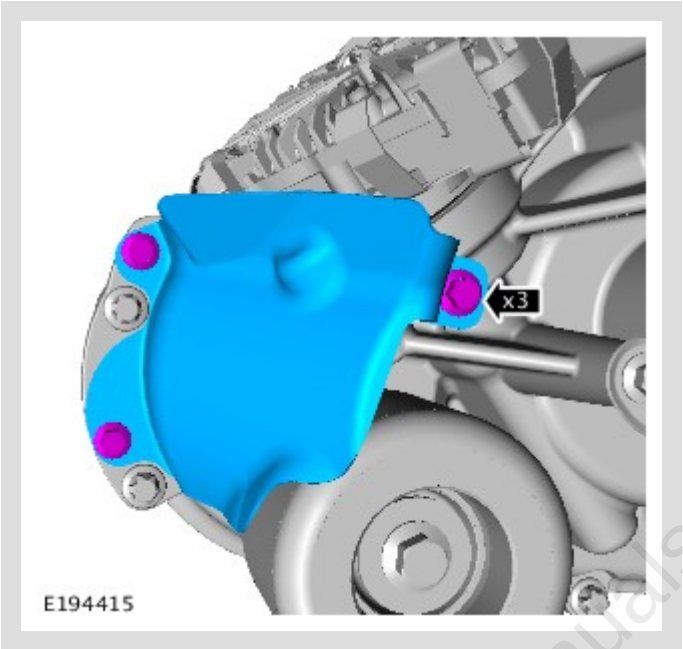

Install the heat shield.

Torque: **8 Nm**

transmissionmanuals.com

14.

NOTE:

This step is only required if previously removed.

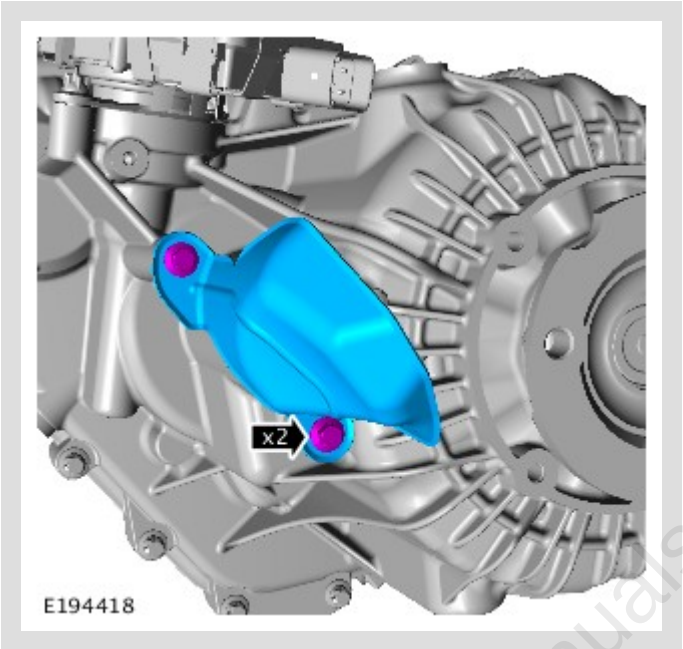

Install the heat shield.
Torque: **8 Nm**

15. Install the transfer case.
Refer to: Transfer Case - V6 S/C 3.0L Petrol (308-07 Transfer Case - Vehicles With: Twin Speed Transfer Case, Installation).
Refer to: Transfer Case - TDV6 3.0L Diesel (308-07 Transfer Case - Vehicles With: Twin Speed Transfer Case, Installation).
Refer to: Transfer Case - INGENIUM I4 2.0L Diesel (308-07 Transfer Case - Vehicles With: Twin Speed Transfer Case, Installation).

16. Connect the battery ground cable.
Refer to: Specifications (414-00 Battery and Charging System - General Information, Specifications).

17.

- Connect the Land Rover approved diagnostic equipment.
- Start the diagnostic service function "transfer case-transfer case control module replacement".
- Start the service function "transfer case-absolute position sensor replacement".
- Clear any Diagnostic Trouble Codes (DTCs) after calibration and check for correct operation.

transmissionmanuals.com

transmissionmanuals.com